RECEIVED DEC 1 1 1978

RTTY JOURNAL

DECEMBER 1978

VOLUME 26 NO. 10

75 CENTS

EXCLUSIVELY AMATEUR RADIO TELETYPE

CONTENTS

THE QRA LOCATOR

TO QRP OR NOT

AFSK GENERATOR

UPDATE- DTU-1

KEYBOARD OPERATED RELAY

Subscription Rates

RTTY JOURNAL

Dee Crumpton, , Editor & Publisher
P.O. Box RY
Cardiff by the Sea, CA. 92007

The RTTY JOURNAL MUST INCREASE ITS SUBSCRIPTION RATES DUE TO THE INCREASE IN MAILING AND HANDLING COSTS. I REGRET THIS VERY MUCH. RATES AS OF OCTOBER 1,1978 WILL BE:
US - $5.00 per year.
CANADA and MEXICO $6.50 per year
Air Mail $7.50 per year.
FOREIGN $9.00 (thru managers) per year
FOREIGN AIR MAIL $12.00 per year.

Published 10 times per year, May-June July-August are combined issues.
Second Class permit Encinitas California 92024.

Subscription rates above.

Business Offices
1155 Arden Drive
Encinitas, California 92024

POSTMASTER SEND FORM 3579 to
Post Office Box 179
Cardiff by the Sea, California 92007

New subscriptions and classified ads are cash in advance as we have no method for billing. New subscriptions will be started with the current issue and one back issue, if requested. . Please do not ask us to start any further back than this. The JOURNAL is mailed about the 20th of the month preceding the dated month. May and June are combined in one issue and July and August are combined in one issue.

BACK ISSUES

A duplicate of any back issue may be obtained from R. Wilson, 4011 Clearview Dr., Cedar Falls, IA. 50613. $1.00 pp. Reprints of all UART articles, $2.00 pp.

RTTY JOURNAL
PO Box RY
Cardiff by the Sea, CA. 92007

FOREIGN SUBSCRIPTION MANGERS

EUROPE
Jean F. Hurtaud — F8XT
Chillac
16480 Brossac, FRANCE

AUSTRALIA
Norman Wilson — VK4NP
P.O. Box-81
Albion Brisbane
Queensland 4010-AUSTRAILIA

ENGLAND
Arthur Owen — G2FUD
Gwenarth
184 Hale Road
Hale, Cheshire ENGLAND

Japan
Toshio Hotta—JA2EFV
4-5-11 Tomida
Yokkaichi City
Mie-Pref., JAPAN 512

BUY YOUR RTTY BEGINNERS HANDBOOK **$4.50**

PRELIMINARY USERS REPORT INFO–TECH M-3ØØ TRI-MODE KBD

Chuck Edwards, W6MNO

The Journal, specifically me, never intended to write a users report on this newly designed keyboard by Info-Tech. However, Mr. Kelce, president of Info-Tech, during a telephone conversation, said he was sending me one of their new M300 KBDS to play with as it was a "very interesting" piece of equipment. I told him that I already had two excellent keyboards and really did not need a new one to test their new 300 tri-converter that we desired, to write a users report on. But one day it came in the mail anyway! So this keyboard just sat in the corner for a few days until I found time to lok at it. Later on, however, still very busy, I begrudedly thought that I had better break it out and see just what was so interesting that Info-Tech had to talk about. Upon reading the operating instructions for the unit I suddenly became so interested that I dropped all that I had to do for that day and hooked this electrical marvel into my system and started to type with it. Let me say, here and now, that this Info-Tech M300 Tri-mode keyboard is by far the most versatile KBD that I have ever used. I could not believe all of the things that it would do. It even had the feel of an expensive electric typewriter and as such could easily touch type on it just like an electronic typewriter. The keys are well placed, so that the programming keys cause no interference with other keys when touch typeing.

Mr. Kelce was not exactly correct when he merely said that it was an interesting keyboard----he should have said that it is a fabulous keyboard. Younger generations would say "out of this world". Why Info-Tech sells it for such a reasonable amount, I do not understand. It is worth so much more.

This model 300 Tri-mode keyboard is, of course, designed to operate specifically with their tri-converters. I found, however, that the KBD will interface with any of the hard-line teleprinters, TVTS, and terminal units and even the KIM-1 with a bare minimum of hardware. I so enjoyed working with this keyboard that I immediately put up for sale, my other keyboards and will eventually order another M-300 to fill out my needs. One thing that is so amazing is the amount of memory that is available Actually, there is so much memory that one can eliminate most, if not all, tape equipment. There is immediately available a primary memory buffer of 700 characters and there are eleven recallable memories of 120 characters each and these can all be tied together for a total of 2020 characters in all. So who needs tape except perhaps for permanent hard copy memory records. With this kbd you can eliminate a strictly communications type computer-- it just is not needed, as the keyboard in its self is a computer with its own rams and roms. (Basically a Fairchild F-8) I have included a listing of the programming that can be written and recalled by pressing two or three keys. Such as the control key and "B" for print out of the brown fox sentence (5) or a "Y" for a line or lines of RYRYRYRY test signals.

One may instantly program ASCII or Morse Baudot at any standard speed up to 300 Baud and any of these teleprinter speeds with a combination of Morse, CW-ID at any legal speed. Morse CW can also be programmed at any speed from four thru one hundred and twenty five in WPM increments.

Fantastic is the name that should be used for this marvelous piece of electronic gear. It is extremely reliable as well. We have run hundreds of hours on it so far, without a single physical failure or a programming failure to do what it was supposed to do. By the way, should you program a false entry, the keyboard circuitry will immediately give a "does not compute" beep beep that lasts for a few seconds and lets you know that you have goofed and to do it over again.

I shall keep the accolades short here even tho more are warranted, as I wanted to add a listing of the specifications and the things that it will do within this report. I will add more info about testings and how the interfacings occur with the converter when we write the users report on their tri-converter. 3cc

The RTTY Journal highly recommends this model 300 tri-mode keyboard, without a single hesitation, for the RTTY'er and the computer enthusiast.

SPECIFICATIONS:

RTTY/ASCII:

RTTY (Baudot) speeds: 60, 66, 75, 100WPM.

ASCII Speeds: 110 and 300 baud

Loop (FSK) Output: non isolated, open collector. 200 vdc max off state (spacing) 100 ma max on state (marking).

RA Mon Output: >+4 vdc, space <+.3 vdc, off equals high impedance 0v<MON<5v

AFSK Output: 2.5Vp-p 1000 ohm impedance, mark equals 2125 Hz, space equals 2295 Hz (170 Hz shift) equals 2975 Hz (850 Hz shift).

ALL MODES:

ALL MODES:

PTT (transmitter keying) Output; open collector, active low plus 200 vdc max, 100 ma max.

Buffer Memory: 700 characters.

Storage Memory: 1320 characters total, 11 addressable memories, 120 characters each.

RTTY/ACSII:

Loop: This output may be used as an FSK keying output or a loop output. This high voltage open collector keying transistor output will switch a positive voltage to ground. If this output is used to key a loop circuit, the loop supply and all other devices in the loop to be keyed must be isolated from ground.

RA Aux: This output is a simple means of monitoring outgoing RTTY and ASCII transmissions.

AFSK: This is the output of the internal AFSK oscillator, and may be connected to the transmitter microphone input for AFSK operation or FSK operation using a SSB transmitter.

PTT: This output may be used to key the transmitter via a remote PTT (push to talk) line. The PTT output is driven by a high-voltage open collector keying transistor, and will switch a positive voltage to ground for turning the transmitter on.

PROGRAMING

Certain special notations are used in describing control commands. Below is an index to these notations:

n a letter or digit entered on the keyboard (any key)

c/r the carriage return key.

s the space bar

$\underline{n}$ a key pressed with the 'shift' key held down.

$\overline{n}$ a key pressed with the 'control' key held down.

$\overline{\underline{n}}$ a key pressed with both 'shift' and 'control' keys held down.

Error Indication: If an invalid command entry is made to the keyboard, an error signal will be generated. The error signal consists of the 'Buffer' LED flashing and the Morse sidetone sounding seven times. This does not indicate a buffer full condition, and while the sidetone is activated (the volume of the error tone is also set by the 'Volume' control) none of the Morse outputs

(keying or Mon) are activated. During the time that the error signal is being generated, all other keyboard operations are suspended. Normal operation will be resumed as soon as the error signal is complete.

BASIC OPERATION

Morse Operation: When the power is first applied to the M-300, or when the 'reset' key is pressed, the keyboard automatically initializes in the Morse mode at app. 8 wpm.

To enter Morse from another mode or to change Morse speeds, simply press the 'Control' and 'M' keys press the digits corresponding to the speed in wpm you wish to send, and then press the 'Return' key.

Note: For a valid speed output the number entered for the speed must be from 4 to 125. Operating characteristics for entries outside this range are undefined. If more than 3 digits are entered, an error signal will result. For other entries outside the specified operating range, it may be necessary to reset the keyboard to resume operation.

Morse Timing: The timing ratios of the Model 300 Morse output comply with the International Morse Code standards, and are shown below. Times shown are based upon the time of a single dot.

Morse Timing: The timing ratios of the model 300 Morse output comply with the International Morse Code standards, and are shown below. Times shown are based upon the time of a single dot.

dot 1, dash 3, element space 1, (space between consecutive dots or dashes in one character), character space 3 (space between consecutive characters in one word), word space 7 (space between words or groups of characters).

The Morse speeds sent by the Model 300 are crystal controlled and are calibrated using the formula: Speed (WPM) equals 2.4 dots/sec.

The speed calibration is true in 1 WPM increments from 4 to 64 WPM and plus or minus 1WPM from 65 to 125 WPM. This calibration is true, however only for the standard weight level of 5.

Morse Weight: The timing ratios of the model 300 may be modified from those shown above by changing the weight level from the normal 5. Changing weight modifies the element space to dot ratio from the standard of 1:1, giving the sent code a different rythem. At turn-on, or reset, the weight is automatically set to the standard value of 1:1.

To change the weight level, press the 'CONTROL' and 'W' keys, then press one of the number keys from 1 to 9.

Weight change examples:
for weight equal 4 :w 4
for weight equal 9 :w 9

Once the weight level is set or changed, that weight setting will remain in effect until it is again changed, either by keyboard command or reset. If the speed is changed, the weight level in effect prior to the speed change will be carried over to the new speed.

MORSE SPECIAL KEYS

In addition to the standard alpha, numeric and punctuation keys there are 7 keys which produce special Morse characters. The Morse characters, and the keys which operate them are shown below:

AR (shifted .)
AS (shifted 4)
BK (shifted)
SK (shifted ,)
attention -* (shifted :)
understand - (shifted ;)

Any keys on the Model 300 that have no Morse character associated with them (return, blank and several shifted keys) are ignored by the Morse output circuits and automatically skip to the next valid character. This allows messages to be loaded and sent in any of the three modes without erroneous outputs from these entries.

RTTY (BAUDOT) OPERATION:

The RTTY (Baudot) mode is entered by pressing the 'CONTROL' and 'R' keys followed by the digits for one of the four available RTTY speeds and then the 'RETURN' key. If more than three digits are entered, an error signal will occur when the fourth digit is entered. If a RTTY speed other than the available speeds is entered, an error signal will occur after the 'RETURN' key is pressed. If an error indication occurs, wait until the error signal has stopped and re-enter the command making sure that the speed being entered is one of the available four speeds.

To change RTTY speeds, follow the same procedure for entering the RTTY mode.

RTTY Operating Examples.
For 60 WPM: R 60 c/r
For 66 WPM: R 66 c/r
For 75 WPM: R 75 c/r
For 100 WPM: R 100 c/r

RTTY SPECIAL KEYS:

The model 300 has a full 4 row keyboard, following the standard ASCII key layout.

The C/R (carriage return) and L/F (line feed) keys have been eliminated and combined into a single 'RETURN' key. When this key is pressed, the keyboard will send the characters C/R (carriage return), L/F (line feed) and the case of character which was sent prior to the activation of the 'RETURN' key, either 'FIGS' or 'LTRS'.

The model 300 also has an automatic C/R. L/F, CASE sequence when the keyboard reaches the end of a 71 character line. The automatic C/R, L/F also incorporates a feature that will not break up words less than 6 characters long. If a space is sent within 6 characters of the end of the line, the C/R, L/F CASE sequence will follow the space.

There are no 'FIGS' or 'LTRS' keys for case shifting. Case shifting is automatically done for the number and punctuation keys. The punctuation keys are located as they are marked on the keytops. Exceptions to this are those keys with markings for which there is no Baudot character. For example, pressing '#' or '%' will send '3' or '5' respectively. There are two Baudot characters for which there is no correct marking on the keyboard. These two characters are located as follows:

BELL -*(shifted :)
Upper case 'H' (shifted;)

In addition, three of the automatically generated characters are available as follows:

FIGS: (Shifted)
LTRS: (Shifted,)
C/R: equals (Shifted)

Note: These keys will generate the Baudot signals for the indicated characters, but do not affect the internal registers in the keyboard, so that additional case information may be also sent when these keys are used. Also, the C/R key (equal) will not reset the internal character per line counter and the automatic C/R and L/F will occur when the appropriate point on the line has been reached as though the C/R (equal) had not been sent.

The RTTY (Baudot) output of the M-300 is a 7.5 bit serial code: 1 start bit (spacing); 5 data bits and 1.5 stop bits (marking).

ASCII OPERATION:

The ASCII mode is accessed by pressing the 'CONTROL' and 'A' keys, followed by the 3 digits corresponding to one of the two available ASCII speeds and then the 'RETURN' key. IF MORE THAN THREE DIGITS ARE ENTERED OR IF THE SPEED SELECTED IS NOT and the 'RETURN' key. If more than three digits are entered, or if the speed selected is not one of the available ASCII speeds, then an error indication will result, just as in entering the RTTY mode. To change ASCII speeds follow the same procedures as entering the ASCII mode.

ASCII OPERATING EXAMPLES:
For 110 baud: A 100 c/r
For 300 baud: A 300 c/r

The 'RETURN' key and the automatic C/R, L/F in the ASCII mode operation C/R, L/F in the ASCII mode operate identically to The RTTY mode except than in ASCII mode, The 'RETURN' sequence is C/R, L/F and a blank character, rather than a case charac ter.

FULL ASCII OPERATION:

In any of the three modes, the 'CONTROL' key and to some extent the 'SHIFT' key perform or indicate special functions, as in changing modes and many other functions which will be covered later. For some of these keys no output is generated, eliminating many of the full set of ASCII characters.

A command has been included which changes the function of the 'CONTROL' key from one indicating keyboard operating command to the normal function of a 'CONTROL' key on a standard ASCII keyboard.

To convert to this mode, the keyboard must already be in the ASCII mode and at the desired ASCII speed. Additionally, it should be checked that all other keyboard operating parameters are properly set. Once this is done, the entry into full ASCII operation is accomplished by pressing the 'CONTROL' and 'Z' keys (Z).

It should be noted that once this is done, the 'CONTROL' key can no longer indicate any operating changes in the keyboard's mode. Also, any of the special functions requiring the use of the control key cannot be accessed.

In order to remove the keyboard from this mode, it must be fully reset, by pressing the 'RESET' button.

In either ASCII mode, the output is an 11 bit serial code: 1 start bit (spacing); 7 data bits; 1 parity bit* and 2 stop bits (marking).

* Note: The M-300 does not generate a parity signal and the 'PARITY' bit, or the 9th bit is always marking.

RUNNING BUFFER:

The M-300 features a 700 character running buffer. While the running buffer is actually Random Acess Memory (read/write memory), in normal operation it performs identically to a 700 character FIFO (first-in, first-out) buffer. All keyboard functions and character s, except 'RESET' and backspace (to be covered later) perform no immediate function. Keyboard entries, including control functions such as mode changes, are loaded into the buffer. It is not until the character or command is outputed from the buffer, in sequence, that any information is sent or mode changes occur.

The output of the buffer can be started and stopped by the 'RUN/LOAD' switch as described in the 'OPERATING CONTROLS' section. There is also a buffer control that can be entered from the keyboard which will stop the output from the buffer, as though the 'RUN/LOAD' switch had been placed in the 'LOAD' position. When the buffer output is stopped by this method, it will be restarted by switching the 'RUN/LOAD' switch to 'LOAD' and then back to 'RUN'. This 'HALT' command is entered by pressing the 'CONTROL' and 'H' keys: (H).

The 700 character running buffer is cleared when the 'RESET' key is pressed. However, pressing the 'RESET' key also clears all other functions and returns the keyboard to the Morse mode at 8WPM. It is possible to clear the buffer only, and leave all other functions (Mode and Speed) unaffected by pressing the 'CONTROL' and 'RESET' keys: (RESET).

SPECIAL FUNCTION KEYS:

ALL MODES

CQ and DE: Two keys on the keyboard actually load two seperate characters into the running buffer with one keystroke. These are the "CQ" and "DE" keys which sequencially load "C" and "Q" or "D" and "E" into the buffer. These two keys count as two characters each in either the running buffer, or any of the recallable messages.

BROWN FOX: The Model 300 also contains a built "BROWN FOX" message generator. This message is sent, in any mode, by pressing the "CONTROL" and "B" keys: (B) When this is done, the keyboard will automatically send: (C/R) THE QUICK BROWN FOX JUMPS OVER THE LAZY DOG 1234567890.

TRANSMITTER CONTROL:

There are two commands whixh operate the transmitter control (PTT) output of the M-300. One character X, turns the transmitter on and the other, O, turns the transmitter off. These commands control three things The "PTT" output of the keyboard, the "TRANSMIT" LED indicator, and the RA MON" monitor output. At all times, except in the edit mode, these three functions operate simultaneously.

After the keyboard is fully reset, and is then placed in the RTTY or ASCII mode, the transmitter signals, ('PTT', XMIT ON INDICATOR and RA MON) are controlled by a "keyboard active" signal. The transmit signal will turn on when any key is pressed, and will stay on for a short period of time thereafter. In this manner, the station transmitter may be turned on and the monitor circuit activated simply by starting to type on the keyboard. The transmitter will stay on the air as long as the time between typed characters does not exceed the delay on the keyboard a-

exceed the delay on the keyboard a-

ctive signal, which is a function of the RTTY or ASCII speed being sent. The delay starts after the running buffer output stops, either from being empty, the "RUN/LOAD" switch being set.- in the "LOAD" position or from a Halt (H) command.

If this type of transmitter control is not desirable, then the transmitter signals can be mannually controlled with the On (X) and Off (O) commands. When the On (X) command is first entered, the keyboard active control of the transmitter signals is disabled, and will not again resume until the keyboard is fully reset.

BACKSPACE (ERROR CORRECTION):

If a typing error is entered into the running buffer, that error may be removed, by entering a backspace, which is a "SHIFT" "SPACE" (SPC) Errors may be corrected only as long as they are still in the buffer, once the transmission of the character has started, it cannot be erased, or modified. Any number of characters may be erased, provided they are all still in the buffer.

Erroe Correction Examples:

Keyboard Entries: THGsE QIC ss UICKBs BROWN ETC.

Keyboard Output: THE QUICK BWORN FOX ETC.

SPECIAL FUNCTION KEYS, RTTY & ASCII ONLY:

Diddle:

A "Diddle" feature has been included on the M-300 keyboard by automatically inserting a non-typing character in the output any time the buffer output would stop, either from being empty, the "RUN/LOAD" switch being in the "LOAD" position or from a 'ALT (H) command.

In the RTTY (Baudot) mode, the non-printing character which is sent is the case signal of the character which was sent prior to the fill-in character, either "FIGS" or "LTRS".

The diddle feature is activated by entering a "CONTROL" "BLANK"

entering a "CONTROL" "BLANK"

(BLANK). The diddle is turned off by entering a "CONTROL" "/" (/).

RY TEST SIGNAL:

When the RY test signal is activated by entering a "CONTROL" "Y" (Y), the M-300 willsend RYs until the end of the 71 character line, followed by the automatic return (C/R) sequence. If the Y command occurs at the beginning of a line, one full line of RYs will be sent (in this case the first character will be a "Y").

If the Y command occurs elsewhere in the line, RYs will follow until the end of the line is reached. Regardless of where this command occurs, the last character in the line will be a "Y".

If this occurs while the keyboard is in the Morse mode, an error signal will result.

Recallablemessages:

The Info-Tech Model 300 has 11 programmable, recallable message memories, each memory having a 120 character capacity. These messages are keyboard programmable, and are stored in RAM. Once a message is

loaded into one of these memories, it will remain intact and can be recalled any number of times, as long as power is not removed from the keyboard, either from turning the power switch off, or a power line failure. A keyboard "RESET" or "CONTROL RESET" which clears the running buffer contents will not affect any of the 11 programmable memories. Ten of the recallable message memories (1 through Ø are general purpose message storage memories, while the 11th one (ID message) has several special features associated with it.

LOADING MESSAGES:

Acess to the recallable memories for writing a message is accomplished by pressing both 'SHIFT" and "CONTROL" keys and the number of the memory to be loaded(n). After this is done, the memory has been accessed and the message may be typed into the memory from the keyboard. At the same time the message is being entered in to the memory, it will output by the keyboard, in whatever mode the keyboard was in when the memory was accessed, just as it would do if the running buffer were in operation. After the complete text of the message has been entered, the end of the message command must be entered to return operation from recallable message to running buffer. This is done by pressing "CONTROL" and "." keys (▼). The loading of the message is now complete.

Loading Examples:

To load memory 1 with a CQ call enter: 1 CQ CQ CQ CQ DE WBØ GUX K K K ▼.

PLAYING MESSAGES:

To play a previously loaded message press the "CONTROL" key and the number of the memory to be played (n). Attempting to play a memory which has not been loaded, or has been destroyed by power removal may result in the keyboard locking up, requiring a "RESET" or "CONTROL RESET" to resume operation.

error correction in recallable memories;

the backspace (SPC) function operates on the recallable memories similary to normal operation of this command in the running buffer. Operation is identical to buffer corrections, as long as the erased or corrected character output has not started prior to the backspace command entry. When wrtiting into one of the recallable messages, however, the error in memory may be corrected even after the incorrect character has been sent, provided the end of message (▼) command has not removed access to the memory. New characters will not however, be sent by the keyboard while the message is being loaded, if the character which was corrected has been sent.

Example:

keyboard entry - THEQUsssQUIC sBssKsBosROWN

keyboard output while loading - THE QUUIC BKROWN

KEYBOARD OUTPUT WHEN MESSA PLAYED – THE QUICK BROWN.

LINKING CONSECUTIVE MEMORIES:

The ten (1 through Ø) general purpose message memories are constructed as, and may be thought of, as a single 1200 character message memory, with 10 fixed entry points spaced 120 characters apart, and a variable exit point (s). The entry point is set by one of the ten digits (1 through Ø) used in accessing the memory for loading, while the exit point is set by the entry of the end of message command (▼). Due to this type of architecture, messages longer than 120 characters may be loaded into the recallable memories with no special requirements for additional command entries.

To assist the operation in keeping track of which memories are being loaded, as a fixed entry point is being crossed, the buffer full LED will turn on, indicating the addressed memory is full and the next adjacent memory is loaded. For example, if a message is loaded into memory 3 and the buffer is full LED comes on, this will indicate that 120 characters have been loaded into memory 3 and that the continuation of the message is being loaded into memory 4.

After the buffer full LED comes on and it is noted that the next memory is being loaded, the buffer full indication may be cleared by entering a "CONTROL" "F" (F) command. This will turn off the buffer full LED which will come on again when the next fixed entry point is crossed indicating that the next memory is being loaded into,

This process may continued from any of the 10 fixed entry points until the end of memory Ø. At the end of memoryØ, the end of message (▼) command is automatically inserted in the memory, an error signal is generated, and operation is returned to the running buffer.

If in the process of loading a long message, one or more fixed entry points are crossed, as indicated by the buffer full LED, after the message has been loaded and a memory play command is entered, corresponding to one of the entry points that was crossed while loading, that portion of the message from selected entry point to the end of the message will be played.

It should be noted that when loading a message into a memory whos next adjacent memory has already been loaded, crossing the next entry point (entering more than 120 characters), as indicated by the buffer full LED, will destroy the message previously loaded in the adjacent memory. If, however, the next entry immediately after the buffer full LED comes on is the end of message (▼) command, the next memory will remain intact.

NESTING RECALLABLE MEMORIES:

In the previous section it was described how consecutive memories could be linked together and treated as one memory. It is also possible to have a message end by calling another message. In this way it is possible to link randomly located messages. It is not possible, however, for a message to call more than one message. after a message calls another message, control will not be returned to the calling message but rather back to the running buffer when the called message's end of message (▼) command occurs. In this respect, the "BROWN FOX" message, (B), is considered a recallable message. If the "BROWN FOX" is called by a message memory, control will not be returned to that message but rather back to the running buffer when the "BROWN FOX" memory end of message signal occurs.

While any of the recallable memories, including the "ID' memory, may be called to end a message, this example shows calling the "BROWN FOX" to end message #2.

2 DE WBØGUX TESTING B.▼

Note: The end of message (▼) command in this case is not actually required, as it will never be read, since control will not return to this message after the B command. This entry is used only to restore synchronization between the memory loading and reading operations without requiring a keyboard "RESET".

I.D. MEMORY:

The ID memory operates similary to the 1Ø general purpose message memories except that it cannot be adjacently linked to any of the other memories, although it can be called randomly from another message. It also has several special features making it ideally suited for storing ID and CWID messages. The access to the ID memory is by the letter I. When the ID message is properly loaded, however, there is both a fixed entry point and a variable entry point.

To fully utilize the ID memory's versatile features it should be loaded as follows: First, to obtain writing access to the memory press "SHIFT" "CONTROL" and "I" (I). Then load the memory with the text of the identification to be sent. Next, enter the Morse mode at the speed you would like send CW idebtification in the RTTY or ASCII modes. This is done just as a normal modechange to Morse would be done: M nn c.r. Then enter the text of the message to be sent

for the CWID, followed by the end of the message command (T)

ID message loading example:

I c/r DE WBØGUX ST. LOUIS, MO.
M 15 c/r DE WBØGUX.

To play the ID message , press "control" and "T" keys (T). Assuming the keyboard is in the RTTY or ASCII mode, when the I command occurs, the keyboard will send in the same mode: "c/r DE WBØGUX ST. LOUIS, MO." it will then switch to the Morse mode at 15 WPM and send the "CWID": DE WBØGUX". This CW-ID will operate just as the normal Morse output does: It will key the Morse keying relay, the Morse "AUX" output, and wll generate a narrow shift on the AFSK oscillator. At the end of the ID message, the keyboard will return to the mode and speed that it was in prior to the calling of the ID message.

When the ID memory is loaded as in the example above, there is a variable entry point located between the two segments of the ID message. Access is gained to the second portion (CWID) only by pressing the "CONTROL" and "C" keys (C). Again, assuming that the keyboard is in the RTTY or ASCII mode, when the C command occurs, the keyboard will skip the first segment of ID message and immediately switch to the Morse mode at 15 WPM and send: DE WBØGUX and again return to the original mode and speed.

If the keyboard is already in the Morse mode when the I command occurs, the keyboard will send only the first segment of the ID message: DE WBØGUX ST. LOUIS, MO." it will then return to the running buffer. If the keyboard is in the Morse mode when the C command occurs, it will skip the first segment of the ID message, and also the mode change and speed information and will send the second portion only at the same speed as the keyboard was set before the C command occured. Again, after the ID, the keyboard will return to the running buffer.

EDIT FUNCTION:

The M-300 provides a simple editing feature in which the 700 character running buffer changes from a FIFO type buffer to a semi-permanent recallable type memory. This allows for the pre-loading and correcting of a message in the running buffer prior to transmission.

The edit function is accessed with a E command entry. Upon receipt of this command the keyboard changes the characteristics of the running buffer, so that the contents of the buffer are not erased as they are sent out. At the same time, the keyboard seperates the 3 transmitter signals: the "TRANSMIT" indicator and "PTT" signals are turned off, while the RA MON signal is turned on. This is done to prevent the transmitter from turning on while allowing the monitor to print the message as it is being loaded during editing. If the "PTT" signal is to be used during the transmission of the edited message, the first entry after the E should be the X command to turn the transmitter when the edited message is sent. Until the keyboard is instructed to send the edited text, it will ignore the X command.

After the edit function is activated, the text of the message may be entered into the buffer, making any necessary corrections with the backspace command. Backspace error correction in the edit mode is identical to that in loading recallable memories.

At any point in the editing process, the entire text of the message from the point where the edited text starts until the character entered may be played back, in its corrected form, by entering a P command. After checking the previously entered text, the message may be continued. The P command may be entered as often as desired to play back and review the text without erasing or altering it.

When the editing is complete, the message may be sent by entering the S command. When this is done, the keyboard is removed from the edit mode, the "PTT" signal will respond to the X command at the start of the text, and the message will be played from the buffer, and will be erased as it is sent.

Recallable message memories (including the "BROWN FOX") may be called while in the edit mode. When loading or playing the text, an error signal will occur when the message is over and returns to the buffer, but when the text is sent S, no error signal will occur.

Note: The maximum number of characters allowed in the buffer during editing is 700. Since the characters are not erased as they are sent, if the buffer becomes full the buffer will become a closed loop and the contents will continue to play until the keyboard is "RESET".

CIRCUIT DESCRIPTION:

The Info-Tech Model 300 Tri-Mode Keyboard is a Fairchild F-8 microprocessor based system, utilizing the 3850 CPU (central processing unit) and 3853 SMI (static memory interface). The 2k byte operating program is stored in two 2708 programmable ROMs (read only memory). The 300 also utilizes 16-2102 programmable also utilizes 16-2102 RAM (random access memory), for 2k bytes of RAM used for the running buffer and recallable message memories.

One of the 8 bit I/O ports on the 3850 performs the function of keyboard scanning. Six bits of this port act as a binary counter addressing the two 4051's (8 channel multiplexers) which scan the keyswitches arranged in an 8X8 matrix. When the address output by the keyscan port corresponds to the address of a closed (pressed) keyswitch, a complete circuit is made between ground and pin 3 of 4051 B, pulling pin 27 of the 3850 low. This signals to the CPU that a key has been pressed, and after internal de-bouncing and conditioning, the address (which is an ASCII code) corresponding to the key that was pressed is loaded into the RAM buffer.

The timing for all outputs on all modes is generated by an internal interrupt timer based on the 2MHz crystal controlled system clock.

Morse output signals appear on Pin 13 of the 3850, and after being diode isolated, are OR-tied to the Morse "AUX" input. After being inverted and buffered, this signal drives the Morse "MON" driver transistor, the reed relay keying transistor, and also a transistor forming one segment of the keyed voltage divider network of the AFSK oscillator, providing a narrow shift of the AFSK on Morse signals. The Morse signal is also combined with the error signal from pin 8 of the 3850 to key the CMOS sidetone oscillator. The signal from the keyed sidetone oscillator is amplified and then fed, through the volume control, to the internal sidetone speaker.

RTTY and ASCII signals are output on pin 14 of the 3850, and after being buffered are used to drive the FSK/LOOP keying transistor and AFSK circuits. The AFSK oscillator is an 8038 function generator connected as a VCO (voltage controlled oscilattor), with pin 8 being the control voltage input. Feeding pin 8 is a switched voltage divider network with either the Mark resistor or one of the two Space resistors in the low side of the divider network at one time. The sinewave output at pin 2 of the 8038 is buffered and fed to the AFSK output jack. The buffered/RTTY/ASCII output is also connected to the input of a three - state buffer, controlled (turned on and off) by a signal from pin 7 of the 3850, to provide the - "RA MON" monitor signal.

The transmitter control signal from pin 34 of the 3850 is buffered and then drives the "TRANSMIT" LED driver transistor, and the "PTT" keying transistor,.

The buffer full signal from pin 33 of the 3850 is combined with the erroe signal from pin 8 of the 3850 to drive the "BUFFER" LED transistor.

I hope this operating manual is as interesting to you as it was to me. Have fun, W6MNO , CHUCK.

TRS-80 OWNERS

Send-Receive RTTY & CW

- Automatic send & receive: RTTY & CW
- Complete hardware and software package
- Connects to your TRS-80 User Port and the key/headphone jacks of your rig
- Ten message memories--255 char. each
- Keyboard buffer--allows typing ahead
- Uses built-in PLL or external TU
- Morse trainer--random 5 letter words
- Includes hardware, cassette & manual

$99 KIT **$129** WIRED

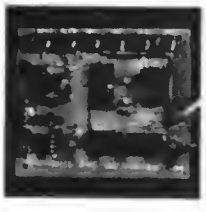

PET version available,
$69.95 KIT
$99.95 WIRED

MICROTRONICS

Write or call for detailed brochure

California residents add 6% tax

P.O. Box 747 (R) Keyes, CA 95328 / (209) 634-8888 / 667-2888

master charge VISA

INFO-TECH M-300

THE SUPER KEYBOARD THAT GENERATES:

Morse 4 to 125 WPM
ASCII 110 & 300 Baud
RTTY 4 speeds, 2 shifts using built in function generator AFSK. Built in QUICK BROWN FOX. Built in RY generator. User programmable CWID. Auto CR/LF. 700 character running buffer and 10 recallable message memories of 120 characters each and much more. Price $450.00 F.O.B. factory

Mastercharge & Visa accepted
For more information write:
Info-Tech, Inc.
2349 Weldon Parkway
St. Louis, Missouri 63141

HITS & MISSES

From The Editor and his Mail

4726 Barbarossa Drive -

San Diego, CA 92115

CHUCK EDWARDS W6MNO

'Tis the time to say Merry Christmas, or nearly so, as this is my only chance. The next issue will be January 1979. So here is hoping that this will be your merriest of all Christmases and that Santa will be most generous with that RTTY gear that he is bringing to your house.

Who would like to have a free subscription to the RTTY Journal? Dee, our publisher gal, has asked me to mention that she will award subscriptions for articles that are sent in and are accepted for the new RTTY Journal Beginners Handbook. It is in the process of being revised and rewritten with a publication date some time in 1980. For short articles she will award a one yeat subscription and for larger articles two years. So hop to it fellows and get in on the free Journals. It will be worth it just to win and get all that publicity as well. Remember tho that this is for the Handbook only. It is time to update it completely and to get some very interesting articles for it that will be of help to newcomers as well as to old timers What is desired most are computer/RTTY or communications articles, and such things as ASCII/Baudot/ascii converters, filters, teleprinter uses and methods, RTTY tricks, improvements and related gadgets. Our subscribers are clamoring for this type of information and we want to get all that we can that will be on the level necessary for the Handbook. Get your written material in as soon as you can. No deadline has been set as yet, but one will be announced in the near future.

I have been waiting for an explosion of letters resulting from my comments of last issue. I said a lot of things about the ARRL regarding the fact that they have not gotten off the pot in all these years with RTTY news and DX operations etc. not a peep yet, so far anyway. Shucks, I do hope that you are not going to take the attitude of the ARRL and accept their ignoring of RTTY, just sitting down. Stand up and fight for our rights. We want to be known as RTTY amateurs all over the world. We are you know -- just as much as are CW, fone, slow scan and others!

I will keep my article short this time as I did write a long users report on the Info-Tech M-300 tri mode keyboard.

I hope that you will find it interesting as I did when I wrote it.

73 and have fun W6MNO Chuck-------

KEYBOARD OPERATED RELAY

This gadget will put such luxuries as VOX for SSB ops and Break-in for CW ops in the hands of RTTY enthusiasts. The heart of the gadget is the character detector. A study of the loop circuit reveias only when a character is punched on the keyboard does full supply voltage appear across the loop terminals on the teleprinter. A neon bulb connected across the printer as illustrated will flash each time a character is punched on the keyboard.

The neon bulb in this unit was glued directly on the face of the photoconductive cell, and the assembly mounted inside a 35mm film can which is bolted onto the circuit board. When the neon flashes, the resistance of the photocell drops applying sufficient voltage to the base of Q1 that it conducts. When Q1 is conducting, the potential at the base of Q2 is 0, allowing the 10ufd capacitor to charge through the 1.2K resistor and the diode. This raises the potential applied to pin 3 of the LM741 I.C. above that which is on pin 2, and the output swings from negative to positive. Q3 then conducts pulling in the relay, and placing the transciever via the PTT line in the transmit mode. In a T.U. without anti-space, a second set of contacts on the relay holds the loop supply reliably closed. When the last character is typed, the capacitor begins to discharge through the pot at a rate determined by the setting of the pot. As the potential on pin 3 of the LM741 drops below the potential on pin 2, the output of the I.C. swings negative again turning off Q3. The relay drops out, and the transciever returns to the receive mode. The drop out time is adjustable up to about 20 seconds.

The photocell in use is of junkbox variety with dark resistance of approximately 10K ohms and light resistance of approximately 400 ohms. Different photocells may require different values of R1

The unit has operated reliably, and makes break-in RTTY possible, especially on 2 meters.

KEYBOARD OPERATED RELAY
J.R. Eadie, VE3DCX
RR # 1
Thomasburgh, Ontario, Canada KOK3HO

UPDATE - DTU-1

UPDATE
Ricky Johnson, WAØCKY
1860 Pawnee Street
Lincoln, NB 68502

After receiving user reports on the DTU-1 appearing in the March and April 1977 issues of the JOURNAL a few minor modifications appear to be useful.

1. Change the 47K resistor connected to S-9 (the edit switch) to 24K. This change takes into account the speed-up of most recorder motors as they age.
2. Add a 4.7K pull-up resistor between plus 5 volts and pin 9 of IC16C.
3. Add S-10, a normally open SPST push button switch, between pin 13 of IC 1C and ground. After you have recorded the last data block with the run-out switch press motor on then S-10 motor off. This will cause a 3522hz tone to be recorded on the tape after the data. On playback the tone will stop the tape from running into the next selection on the tape. If you wish to restart the tape, momentarily close the clear switch and the system will move on to the next selection.
4. I used several diode AND gates in the circuit simply because I had them available in my junk box but had no TTL AND gates handy. Diodes will block a reverse polarity D.C. signal but since they exhibit a very small capacitance they may pass a very fast pulse even if it is of reverse polarity. The only part of the DTU-1 circuitry sensitive to this is IC 17B. This has caused some problems on playback with the motor starting then immediately stopping again until the buffer empty pulse starts it again. This causes no errors but does interrupt the steady flow of data to the loop. See figure 1 for a simple modification that will prevent this glitch from happening.
5. Some users have found the ALC in their recorders severly muffles the high frequency harmonics present in the pulse circuit preventing reliable playback. The best cure is to disable the ALC circuit. Most recorders will now work fine. If the recorder is overloading add a 4.7K resistor between ground and the pulse output. Decrease the size of this resistor until overloading stops.

• RTTY-DX •

SKIP PRINSEN WB6CYA 714-276-3182

3611 Merrimac, San Diego, Calif. 92117

GREETINGS TO ALL!

For those of you who have not been keeping tabs on 10 meters have really been missing the boat. During the VK,ZL, OCEANIA Contest I made 63 contacts of which only 4 were USA stations. 80% of my contacts were on 10 meters. This band is really super, so when you get tired of the QRM from the big guns, come on up and enjoy the fun.

Ted Double, G8CDW writes that the BARTG sponsored bulletin transmission time has had to be altered, and is as follows: Ø730 GMT beamed to VK and ZL, 153Ø GMT beamed to the far east across Europe and 19ØØGMT beamed to W/VE all on 14090KZH.

This is their summer schedule but in the not too distant future will be changed back to accomodate their winter conditions.

Al, 3D6AD should be QRV again from his QTH in Africia. I had hoped to meet him during his stay here in California but that did not turn out. I hope next month to have more info from him on his future plans for operating.

DXCC Honor Roll, a listing to show how the various active stations are doing on DX chasing will be published in the next issue of the JOURNAL. Those who have already sent in their inputs and have updates please feel free to call me. I must have the inputs no later than the third week of December. I need two sets of numbers such as 28/13. Meaning that you have worked 28 countries and confirmed 13.

Bruce Frahm, KØBJ writes that he will be the ham operator aboard the Yankee Trader on next years circumnavigation February-November. Planned stops are for: KZ, HC, CEØ, VR6, FO8,ZK1, KS6, 5W, 3D2, YJ, H44, P29, 9V, 4S7, 8Q, 5Z, FH, D6, 5R, ZS, ZD7, PY, S79 and others along the route. Most will be brief, from a few hours to two days. He says that he will try to keep in touch with RTTY boys and let them know what will be going on, as most operations will be more or less spur of the moment. W3DJZ has stated that he might be interested in keeping in touch. While on board mail can reach him at: Yankee Trader, c/o Windjammer, P.O. Box 12Ø, Miami Beach, FL 33139.

Bruce is need of help in the form of a borrowed mite. If someone has one that they could loan to him for his trip, please contact him at the above address. I think that a 28 skin tight would possibly fit the bill also.

W5AK is planning to handle QSL's so QSL's will be via W5AK.

Special event station 4NOD, 4079 WARC and YTØIARU are being operated on all amateur bands from the international conference on technical activities in developing countries being held in Kupari, Yugoslavia. The stations are expected to remain active through early December. The demonstrations are being used to show the value of amateur radio in developing knowledge and technical activity in developing countries. QSL cards may be sent to 4NOD via YU2CQ, 4Ø79WARC viaYU2DX and YTØ1ARU via the SRJ the IARU member society in Yugoslavia.'From WIAW Bulletin'.

YN1XO is a pirate station. He reportedly made 258 contacts in CARTG. Mac, K7BV got this info from YN1-XO's QSL manager W3HNK.

JA1DSI Minoru worked H44CD on 20 meters. He will be the high commissioner from New Zealand for the next 2 to 3 years. His home call is ZL-2AQQ and QSL is via:PO Box 69F, Honiara, Soloman Island.

G3PEJ recently worked Rahul, VU2-YK who was operating on 10 meters at 1430 GMT so here is another much sought after station. QSL's to:Rahul Kapoor, H-49, Rajouri Gardens, New Delhi 27, India.

Also some of the active DX that was worked this month by Jim, W8JLN was 9H1FV, YU3EM, HR2AFK, LX2HC, 9Y-4LG, LZ2EE, HA5KDQ and UK2BAB.

Very few awards were received this month apparently the summer outdoor activities have taken its toll on the RTTYers HI HI.

WB2VTD, John received WAC all on 20 meters #66 on 28 October 1978.

I2WEG, Giancarlo received WAC all on 20 meters #65 on 20 October 1978.

From Doc, W7MI he writes that he worked ZS1ZH/ZS3 in Namibia during the CARTG but apparently the QRM was too much for "Nico" and he did not stay around very long. During the summer he also worked ZF2AC, 8P6AY and KV4AQ.

SV1TI, Basilio in Athens, Greece is presently on using 50 bands and 425 heity shift. This from Jean F8XT.

DJ8BT, Hans sends that DL2XP will be active from 4X land signing as DL2XP/4X, QSL is via DL2XP Rene Fueilmann, Fasanenweg 15, 8056 - Neufahrn, Germany Federal Republic. This operation will be for the European DX contest this month.

4U1ITU will also be active during the contest operated by DJ8BT and his group. QSL via DJ8BT, Hans Schalk, Hammarskjoeldring 174, 6000 Frankfurt 50, Germany Federal Republic.

Carl, K6WZ, worked HB9AVK and I5GZS during CARTG on 40 meters. As soon as he receives his cards he'll have WAC on that band.

I received a copy of Arewise, this is the official magazine of the RTTY group NSW division of Australia. It is very nicely done with interesting articles and most important a growing publication. Their subscription is $2.00 for local mailings. The secretary of the group is Bob Taylor, VK2ADE RTTY Group, CI-W.I.C., 14 Atchison Street, Crows Nest, N.S.W, Australia.

RTTY CONTEST CALENDAR———

European DX Contest 11-12 November 1978, 0000-2400 GMT.

14th Alexander Volta RTTY DX Contest - 2-3 December 1978. 1200 GMT Rules in November issue of JOURNAL.

Giant Flash - January 1979 - no info yet.

BARTG 1979 - March 1979 - no info yet.

73's de SKIP, WB6CYA...

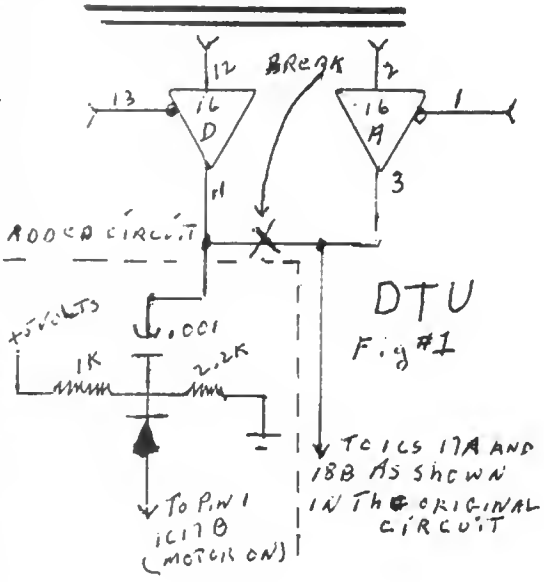

YOU ASKED FOR IT–

BOTH MORSE AND RTTY

ST-6000

DS-3000 KSR

The ULTIMATE in coded communications can now be yours with the new DS-3000 KSR TERMINAL (Version 3) and ST-6000 DEMODULATOR. Enjoy the convenience of composing and editing your messages BEFORE transmitting; decode and display CW as well as RTTY signals. Connect the HAL ST-6000 and DS-3000 KSR to your transceiver and antenna and work the world on RTTY and CW.

ST-6000

- 170-425-850 Hz Shift
- Low or High tones
- Crystal tone keyer
- Active band-pass filters
- Autostart and antispace
- ATC and DTH
- KOS for keyboard break-in
- Scope or meter tuning indicator
- AM or FM limiter modes
- Table or rack mounting
- I/0 interface to current loop, RS-232, MIL-188, and CMOS

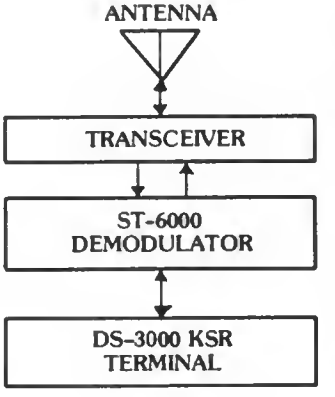

DS-3000 KSR

- MORSE, BAUDOT, and ASCII codes
- Full 72 character lines
- 16 lines of display
- Word wrap-around
- Edit with WORD, LINE, & PAGE modes
- Keyboard programmable HERE IS message
- Up to 175 WPM CW, 5 speeds BAUDOT & ASCII
- 8080A microprocessor controlled
- MORSE also output as ASCII or BAUDOT
- I/0 interface to current loop or RS-232
- New streamlined 12 inch display
- On-screen indicators of WORD & PAGE modes

ST-6000M (Meter) **$495.00**
ST-6000S (Scope)..... **$595.00**

DS-3000 KSR V3 ..... **$1575.00**
DS-3000 KSR V2 (NO MORSE) . **$1195.00**

Write or call us for our new amateur catalog.

HAL COMMUNICATIONS CORP.
Box 365
Urbana, Illinois 61801
217-367-7373

arma

For our European customers see HAL equipment at:
Richter & Co.; Hannover
I.E.C. Intereko; Bissone
Primetek Systems; Handen, Sweden
Radio Shack of London

THE QRA LOCATOR

HOW TO USE THE QRA LOCATOR
Ted Double, G8CDW

This system is in general use through out Western Europe and it enables two stations to calculate the distance between them pretty accurately. As most VHF contest scoring systems are based on the distance between the two stations in contact, the use of such a system is essential. The same information is used in the compiling of the Rules for the VHF RTTY Contest in England and it works out very well.

This grid system indicates the position of stations and is used primarily on the VHF bands. It consists of two capital letters, two figures and a small letter, e.g. EH68f. The capital letters mark the square between two degrees longitude and one degree latitude. These large squares are subdivided into 80 smaller squares which are numbered continuously from 01-80 from top left to bottom right in eight horizontal lines of ten squares. The squares thus formed are again divided into 9 even smaller squares and marked with the small letters a-h and j.

The lines of longitude start at Greenwich and run in two degree distances to the East with A B C ..., to the West with Z Y X...

The lines of latitude start at 40N and run in one degree distances with A B C...northward and Z Y X.. to the south.

The International alphabet of 26 letters is used.

EXAMPLE: EH68f
1. letter for vertical row E
2. letter for horizontal row H
3. number of square 68
4. letter for small square f

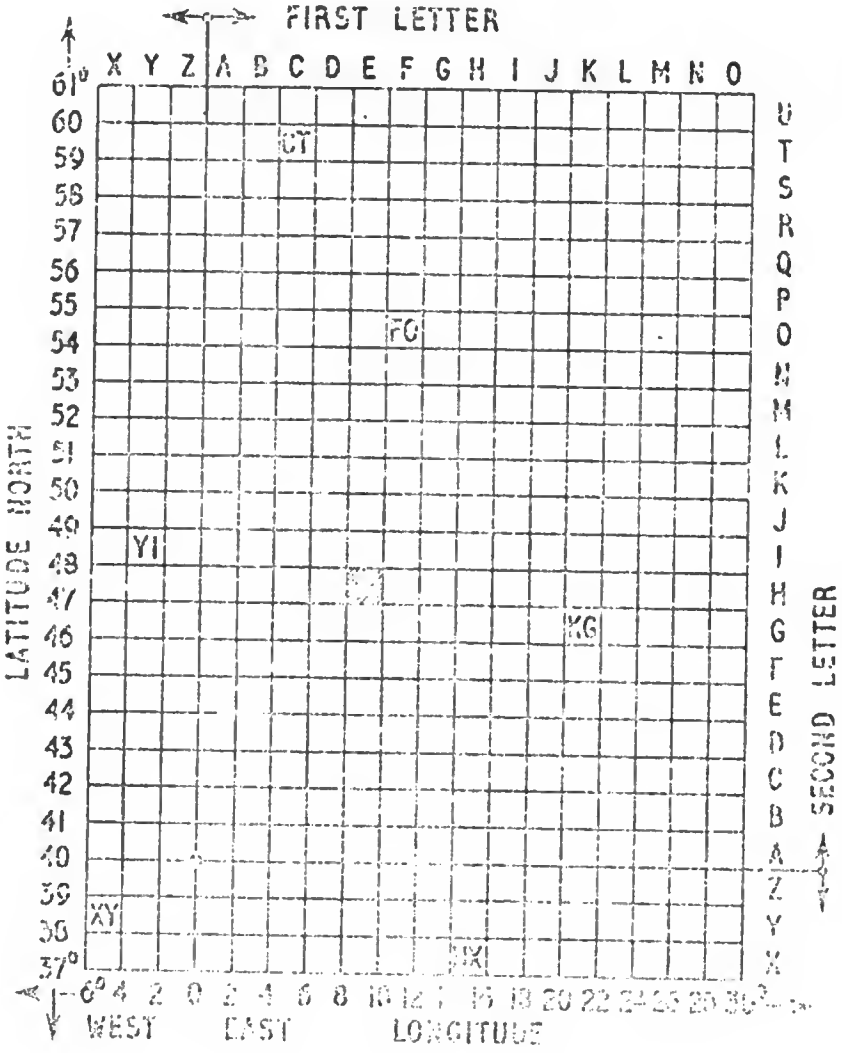

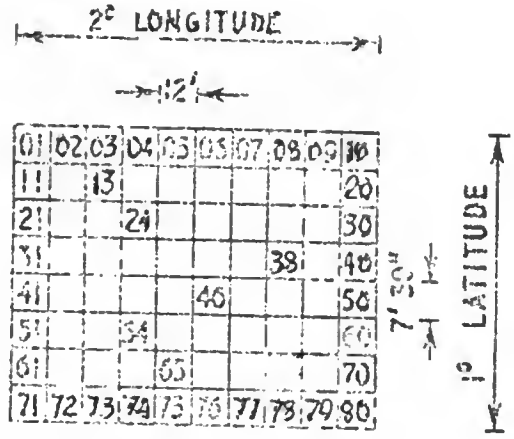

NUMBER OF THE SQUARE

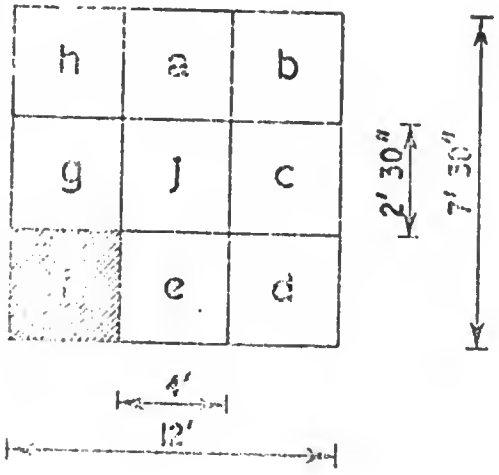

A.D.M. Communications, Inc.

Teletype & Communications Equipment

Doug Mathena (714) 747-0374

1322 Industrial Ave. Escondido, California 92025

SALES and SERVICE

New & Used Teletype Machines

COMPLETE REPAIR ▪ RE-BUILDING

PARTS ▪ PAPER ▪ MOD. KITS

REPERFS ▪ T.D.'s ▪ RE-WINDERS

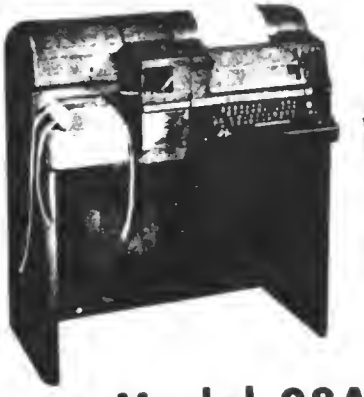

Model 28ASR Model 28KSR

WA6PMA DOUG

Classified Ads

30 words $2.00. Additional Words 4 c ea. ***Cash with Copy - Deadline 1st of Month.***

FOR SALE: Model 28 TD's, Reperfs, and 28 typing units with fan paper roller only. Write:Skip Prinsen, 3611 Merrimac Ave., San Diego, CA 92117 for price quotes.

NS-1A PLL Demodulator W/T $26.95 ppd. Complete kit $19.95 ppd. SASE for info. Nat Stinnette Electronics, Tavares, FL 32778.

BANDPASS ACTIVE filter 2125/2295 Hz. Easily tuned. Requires plus 12 v. Complete kit $11.95, W/T $16.95 ppd. Nat Stinnette Electronics, Tavares, FL 32778.

AFSK GENERATOR direct replacement board for AK-1 in ST-6. Has CW-ident with your call. 170 shift only. Other shifts available. Stable output. Special at $29.95. Allow 3 weeks for delivery. Sulfun Electronics Services, PO Box 11181, Santa Rosa, CA 95406.

UT-4 KITS NOW Available. Enough components to fill board. All necessary logic, resistors, diodes, transistors and capacitors. Complete documination. Commercially made boards. Price $109.95. UT-4B Board alone $17.95 with documentation. Special mini parts package for UT-4 board includes resistors, capacitors, diodes and transistors. Price $8.95. M4D Power Supply for above. Kit $31.95. Add $1.00 for shipping. Daytapro Electronics, formerly NuData Electronics, 3029 Wilshire Lane, Arlington Heights, IL 60004.

RTTY ID GENERATOR. Accepts 5 or 12 volt supplies, 31 characters available, please include letters, figures, spaces etc. Your preprogrammed answer-back must be supplied with order. Example: DE K9WRL Neil ARL HTS ILL. Board same size as ST-6 boards. $34.99 kit. Board alone $8.50. 5V power supply for above $11.95. Daytapro Electronics (formerly NuData Electronics), 3029 Wilshire Ln., Arlington Heights, IL 60004.

ELECTRONIC KEYBOARD CABINETS. Six sizes available. Depth 8.4 in. Height 3 in. Width 14 in. $15.20, Width 17 in. $18.35, Width 20 in. $19.25. Depth 11.4 in Height 3 in. Width 14 in. . $16.50 Width 17 in. $18.80 Width 20 in. $ 20.75. Alum top and base. Shipping included in prices. Blue base with choice of black or white top. 10 minute timer kit, variable 1-20 minute $8.95 kit. Board alone $3.95. Daytapro Electronics, (formerly NuData Electronics) 3029 Wilshire Ln., Arlington Heights, IL 60004.

TELETYPEWRITER parts wanted for all machines manufactured by Kleinschmidt, Mite and Teletype Corp., New only, Also sub-Assembled. I pay shipping. Phil Rickson, W4LNW, Rt. 6, Box 1103G2, Brooksville, FL 33512.

SURPLUS TD Paper yellow and oiled 11/16 carton of 10 #3.00 Wt. 13, 11/16 carton of 40 $10.00 Wt. 47, 7/8 Carton of 8 $3.75 Wt. 13, 7/8 Carton of 32 $1200 Wt. 47. Add UPS wt. Harmon, 5628 10th Ave., So., Birmingham, AL 35222.

COMPLETE RTTY SET-UP-Plug it in and go - model 19 printer, model 14 tape distributor, model 14 reperf, terminal unit, AFSK oscillator, loop supply, general fireproofing desk, light, and about 80 picture tapes- all for $225.00. Call Dave, K3KD (215) 754-6286.

CRYSTAL CONTROLLED XB-6 clock boards for the UT-4. Single sided PC board has provisions for two clocks from one crystal. May also be used for NuData/Daytapro, UT4B boards. . Board size 4 1/2 x 6 1/2 inches. Price $8.95. Complete kit $26.95.. Daytapro Electronics (formerly NuData Electronics), 3029 Wilshire Ln., Arlington Heights, IL 60004.

TU LOOP SUPPLY BOARD. Contains all necessary for plus 12 minus 12 low voltage supply with provisions for high voltage loop supply. Similar to that of ST-5. Ideal for most TU's including DT-500 and DT600 units. $5.95 per board plus 90¢ for shipping. Daytapro Electronics, (formerly NuData Electronics), 3029 Wilshire Lane, Arlington Heights, IL 60004.

NEW CW ID UNIT. Includes many extras, on board interface for FSK and AFSK plus H.V. interface, 10 minute timer, variable speed 5-24 WPM, on board 7805 allows 5 or 12 volt use. $37.50 kit. Mini version of above, ID only with 7805 regulator $21.95 kit. Board alone (same for both units $9.45. Power supply for above 5V @ 1AMP $11.95 kit. Daytapro Electronics, (formerly NuData Electronics), 3029 Wilshire Ln., Arlington Heights, IL 60004.

MODEL 28 ASR Teletypewriters $350-$375. RO Consoles $175. Paper winders $35. RO - 3-speed teletypewriters $175. Tape perforators $50, much more. State your wants. Sens SASE for partial list to:GOODMAN, 5454 South Shore Chicago, IL 60615, (315) 753-8342.

PRINTED CIRCUIT BOARDS: RTTY Seical with TTL logic, (73 magazine, Nov. 72) $12.00 ST5A-W/P.S. (2 boards) $6.25. AK-1 (AFSK) $4.25. CW IDer (Feb.73, 73 magazine) $4.75. New CW IDer(dec. 76, 73 magazine) $8.50. Synthesizer-75-S Collins rec. (Dec.75 Ham Radio)(2 boards) $12.50. Digital capacitance tester - W/PS (Radio elec. Dec 77) (2 boards) $11.00. Speech compressor (QST Mar.76) $9.50. New logic probe (board and parts)READ:TTL-open -low-high $6.95. Hefty 12v. supply regulator 5A.-50A $2.50. Warble alarm/siren (5w) (board & parts) $3.95. Instructions and parts list included: S.J. Zalewski, 29307 Red Cedar Dr., Flat Rock, MI 48134. 313-782-9316.

Electronic Equipment Hotline is a new classified advertising newsletter for buying and selling professional, industrial, and surplus electronic equipment. Subscriptions $6/year, ads 50¢ per word. Prepublication offer:$1.00 off subscriptions and 20% off all ads postmarked before October 1, 1978. Electronic Equipment Hotline, PO Box 4768, Panorama City, CA 91402.

TELEPRINTER parts, manuals, gears, ribbons, paper, tape, converters; toroids. SASE for list. Wanted:TT, KL, parts, 2BP1 etc., tubes. Typetronics, Box 8873, Ft. Lauderdale, FL 33310 WAN7F-N4TT.

NEWS-NEWS-NEWS - Amateur Radio's Newspaper "Worldradio". Trail subscription Two Issues for one dollar. "Worldradio" 2509-F Donner Way, Sacramento, CA 95818.

Ham Radio Magazine - The no-nonsence state-of-the-art technical magazine. Dozens of exciting projects and an emphasis on quality unmatched by any other radio magazine. Subscribe now and see for yourself. 1 year. $12.00.. 2 years $22.00 and three years. $30.00. Ham Radio Magazine, Greenville, NH 03048.

FOR SALE: Brand new 3rd edition of the list of RTTY stations in frequency order, now contains more than 2500 frequencies of commercial stations like press, weather, telex, etc. on shortwave. A section with more than 1500 abbreviations used in TELEX net is also included. This offset printed list is airmailed to you for $15,00 or 37 IRC from Joerg Klingenfuss, Goethestrasse 14, D-7400 Tuebingen 1, West Germany.

THE DOVETRON SSD-100 solid state cross display replaces the conventional CRT and accociated high voltage power supplies as the tuning indicator in the MPC-Series RTTY terminal units.
In addition to "Instant-on" operation and a predicted reliability in excess of 100,000 hours, the solid state display out-performs the original CRT in every instance.
The absence (or deactiviation) of the high voltage supplies and the resultant decrease in heat generation increases the MTBF (Mean Time Before Failure) of the terminal unit more than 10 times.
The display itself consists of high intensity (4 millicandelas), red, rectangular LEDs (Light Emitting Diodes) arranged in the traditional cross pattern and operated in a baragraph mode. The two LEDs that form the apex of the cross are tied into the terminal unit's logic in such a way that they extinguish if the TU is improperly tuned to the incoming tones, or if the incoming signal is up-side down in respect to the "sense" of the terminal unit.
A separate LED in the upper left quadrant of the cross display monitors the two input channels and flashes" in the presence of time or frequency dispersive multipath distortion,indicating that the MULTIPATH CORRECTOR should be turned on.
Separate LEDs in two other quadrants monitor the status of the internal loop, the Signal Loss circuit and the Send/Receive mode of the terminal unit, making the SSD-100 a convenient display center of the various functions.
A light sensitive photocell in the fourth quadrant monitors the ambient light conditions at the operating location and automatically adjusts the display's light output. Under normal conditions, the SSD-100 may be read comfortably from 75 feet.
The new front bezel contains an anti-glare optical filter and provides 30% more viewing area than the original CRT bezel.
A retrofit kit (SSD-100K) is available to update existing CRT-equipped terminal units in the field. Your inquiry will bring complete details by return mail. DOVETRON, 627 Fremont Avenue,(PO Box 267), South Pasadena, California 91030.

IF-2 SELCAL-WRU circuit board,$15. (73 mag. Nov.78). Contains all circuits to control TTY and transmitter. Programmable to any access code in minutes. Easily interfaced to any station. Connects to UT-4(UART), or IF-1 regenerative repeater PCB, $12.00. Complete documentation.Commercially fabricated boards. R. Parry, 38 W. 255 Deerpath Road, Batavia, IL 60510.

SPR-4 35 XTALS, SNB, SCC-4, RY-4 and HAL ST-6 $375.00 Call:512-226-7344.

NAME TAGS

....WITH "RTTY" IF DESIRED....
BEAUTIFULY ENGRAVED
CALL PLATES WITH PIN

CALL ONLY $1.80 PLUS NAME $2.15
WITH CLUB NAME $2.90
Over pocket with pin ad 75¢

SPECIAL DISCOUNTS TO CLUBS Write for quote
COLORS: Green, Blue, Black / white letters

FAST SERVICE

DESK AND SHACK PLATES ANY COLOR $3.75

Calif. res.please add 6%sales tax
Postage Paid in U.S.A.

EDCO ENGRAVING
P.O. Box 15093
San Diego, Calif. 92115

WHAT! THE ST-5 improved? You bet! The MEG-1 RTTY Demodulator is designed to be built by the beginner, modular, and easy to work on. Curious? For information and prices write to the Midnight Engineering Group, PO Box 349, Galesburg, IL 61401.

PRINTED CIRCUIT Board drill bits! You can now get carbide printed circuit board drill bits for a reasonable price. 1/8" shank , approximately 1" long. Four sizes available; .047"(approx. #56 drill), .043" (#57) , .033"(#66), and .030" (approx. #68-69). $1.25 each, Includes shipping, Minimum Order Is Two Drill Bits. Illinois residents add 5% sales tax. Midnight Engineering Group P.O. Box 349, Galesburg, Il 61401.

YOU NEED Information on Commercial RTTY Stations? News Agencies, Telex, Weather..on shortwave? I have up-to-date frequency, callsign, schedule, code lists. Write for details. Joerg Klingenfuss, Goethestrasse 14, D-7400, Tueingen 1, West Germany.

FOR SALE: KIM-1 Microcomputer. Never used. Together with a cabinet but no power supply. Includes all books and what ever comes in the original package $175.00. W6MNO, Chuck Edwards, 4726 Barbarossa Drive, San Diego, CA 92115. Phone 714-582-2739.

EXPERT REPAIR WORK done on Non-commercial Teletype machines. Chicago area only. Trouble with working machine $20.00 plus parts. Others done by estimate. Call 312/870-0555 and ask for Neil.

UT-4 COMPONENTS & Proms. FC-33512DC Fifo $1200, TMS -6011NC or AY-5-1013A Uart $6.00. See November ad for other items. Peter Bertelli, W6KS, 5262 Yost Place, San Diego, CA 92109. 714-274-7060.

FOR SALE: Beautiful 28 ASR underdome reperf and other goodies $450. ST-6 with UT-4 all set to go $450. Both items $800.00. WB6JNV, 1612 Big Dipper Way, San Diego, CA 92073 Phone 714-428-3907.

AM LOOKING FOR 81/2 inch wide sprocket feed rolls any color. Would someone tell me where it can be bought reasonabbly? W4TVZ, Rte. 4, Box 364-1, Deland, FL 32720.

68ØØ MICROPROCESSOR Owners--- RTTY operating software for SWTPC or similar processors. Transmit Baudot or Morse and receive Baudot code. Written for on the air use -- Kayboard selection of pre-loaded messages or CW ID. Can also be used as buffered CW keyboard with keyboard speed control. For more info and price send brief description of your system to: K9AR, 742 S. Vail Ave., Arlington Hts., IL 60005.

MODEL 28 "UNDERDOME" typing reperf set for mounting above TD in ASR, fully perforating, complete - with 60-75-100 wpm gearshift, $375, single speed, $275. Model 28 ASR's, KSR's, Stand-alone reperfs and TD's, gears and parts for Model 14, 15, 19, 28, 32, 33, and 35 equipment, ribbons, auto CR-LF kits for Model 28 printers, $12.75 ppd, answerback devices, more. Send SASE for complete list and prices. Lawrence R. Pfleger, K9-WJB, 1715 E. McPherson St., Kirksville, MO 63501.

VHF RTTY NEWS

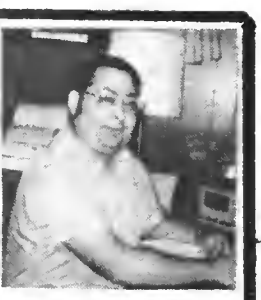

Arny Gamson, K6PXA, 8034 Gentry

N. Hollywood, CA 91605

Congraduiations to two very rapidly growing RTTY Clubs who are very successfully promoting RTTY from the mile-high city of Denver, Colorado- and the heart of America, Iowa-Illinois.

Both are reflecting their pride with wide area coverage, exclusive RTTY repeaters and excellent newsletters.

If you wish to support their Club-Society and operate their repeaters if you are in that area of the country, contact WBØQCD and KØOST/WDØBZA, Ok in latest call book, officers of the metro amateur FM-RTTY Club and the Bi-State VHF Teleprinter Society respectively.

Our editor, Chuck, W6MNO is not doing so shabby as President of the SDTG (San Diego Teleprinter Society). The last dinner meeting that I attended was actually overcrowded with avid RTTYers and larger accomodations are being considered to welcome the many newcomers. Much activity and interest was generated at the San Diego Convention held locally and internationally.

The San Diego group is actually an accomplished spin-off from the Los Angeles-Orange County Southern California Amateur Teleprinters Society (SCATS), which has members of up to 200miles to the North of the SDTS.

Vast numbers may necessitate another split next year of the SCATS group - Orange County and Los Angeles North West. This will eliminate the inconvience- Saturday timing - long distance problems and permit a much more convienient night and perhaps a dinner meeting like practically all other radio clubs have.

Chucks' group of about 60 members has an attendance of approximately 80% while SCATS, in 3 1/2 years has rarely had more than 20%.

It is interesting to see how other RTTY Clubs handle this problem and something to watch for; being too successful in our zeal to promote RTTY. We have an unofficial motto:" are U an active member or do you just belong?"

Hope other clubs and individuals are responding to the FCC's requested NOTICE OF INQUIRY. "NOI", regarding ASCII legalization. The SCATS Club and AMRAD in Washington, D.C. area are formally preparing their response, it really works!

In fact, we may respond to other "noi'S" such as FCC refund of license fees and such important issues.

This is an important Club project for all to consider.

Looking forward to a great 1979 for RTTY and Ham Radio!

SEE U ENJOY --ARNY

Editors note- Arny Gamson, is of this writing, in the hospital suffering from Cushmans disease, which entails the removal of the Pituitary gland. I am sure cards and letters to his home will be much appreciated.

a plus output with reference to the center tap or chassis ground. Now if we also do the same thing except reverse the diodes the output will be negative with respect to the center tap or chassis ground So what we now have are two 12v. power supplies., one positive and one negative with respect to ground.

The diagram shows an easy way to make one of these split 12v. power supplies (regulated) using the LM340T-12 3-terminal positive regulator and the 320T-12 negative regultor. These devices give good regulation and are rated at lamp. Each has a metal tab on the back side which can be bolted to a heat sink. On the LM340-12 this tab is the ground connection and is common to one of the pins so it can be bolted to the chassis using a nylon bolt and nut. Unless you expect to draw the full 1 amp. it is not necessary to use a heat sink, the metal chassis will serve just as well. The ground pin on each regulator should be connected to the chassis ground.

There is another series of these 3 terminal regulators which are interchangeable with the 340 and 320 series. They are the 7812 (plus 12v.) and the (-12v.0. Their size is a little larger.

AFSK GENERATOR

AFSK GENERATOR

Martin Geisler, WA6TIC
11300 Hartland St.
North Hollywood, CA 91605

FEATURES:

Crystal stability without crystals
Sinewave distortion less than 1%
Excellent temperature stability (20 PPM/C)
Insensitive to supply voltage change. No need for regulation (12 to 20Volts causes only 1 Hz change).
Independent Mark and Space adjustment
High output level
3 Volts into 600 ohms
Simple adjustments
Inverted and upright operation possible

The one IC that will do all this is made by EXAR (XR-2206) and was designed with FSK generation in mind. It has an internal current switch that transfers the oscillator current to any one of the two external timing resistors to produce two discreet frequencies. The AFSK generator circuit shown is layed out so that it is possible to operate with two totally independent tone frequency pairs, by the external timing capacitor C1 across pins 5 and 6, and by a timing resistor connected to either pin 7 or pin 8 to ground. The frequency is given as F equals 1/RC(in HZ). The range of the resistor should be between 4k and 200k ohms. It will operate with a supply voltage of 10 to 26 volt. The output amplitude is inversely proportional to the resistance of R 17, the Output Gain control. Thus, for example,R 17 equals 50K ohms would produce approximately 3V sine waves and R17 equals 25k would give 1.5 V out.

C1 is the timing capacitor and should be the best quality capacitor you can obtain. The frequency stability of the oscillator, with respect to temperature, is dependent on the capacitor and resistors.

The resistors R1, R4, R7, and R10 should be a 1% type and to solve the problem of obtaining a large selection of resistors to chose from, a 5% to 10% carbon resistor (R2, R5, R8, and R11) may be paralleled to trim the frequency so it will reach the range of the adjustment pot. The true resistance shown in the parts list is based on an exact .01 uf capacitor for C1.

The loop input through the use of a bridge and opto-isolator will accomodate a series loop of any polarity that is between 20 and 100 ma. The logic input can be driven by most logic families that have a low less than 1.2V and a high above 2.0V.

Reprinted from RTTY JOURNAL-July-August 1975. Retyped by Glenn Charnock, WB6JKM.

"CHARLIE SPECIAL" Teletype AFSK Demodulator

Parts Layout (Viewed from top of printed circuit board)
Drawing by Glen Charnock WB6JKM

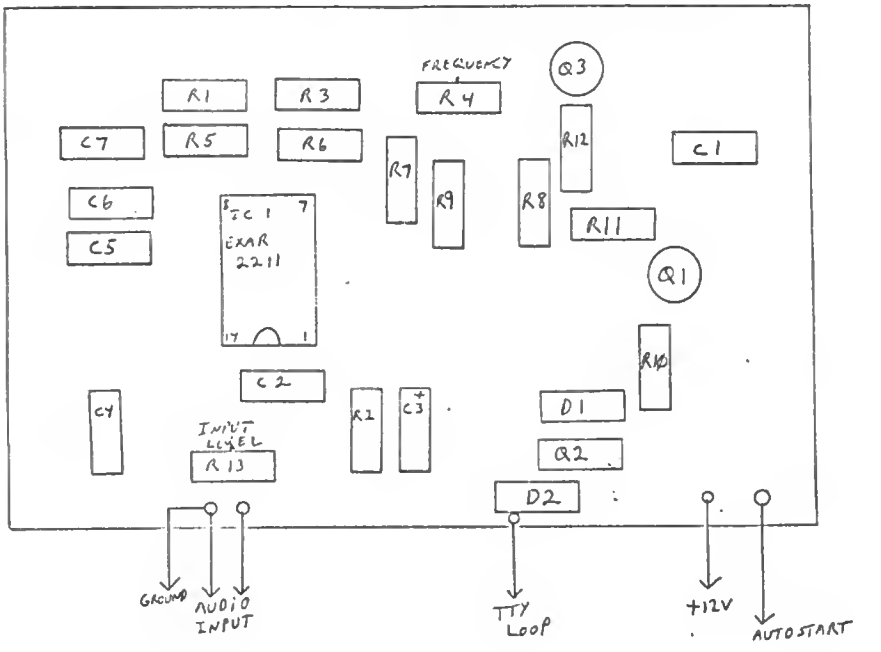

AFSK GENERATOR by Martin Geisler WA6TIC

Parts Layout (seen from top of PC board)
Drawing by Glen Charnock WB6JKM

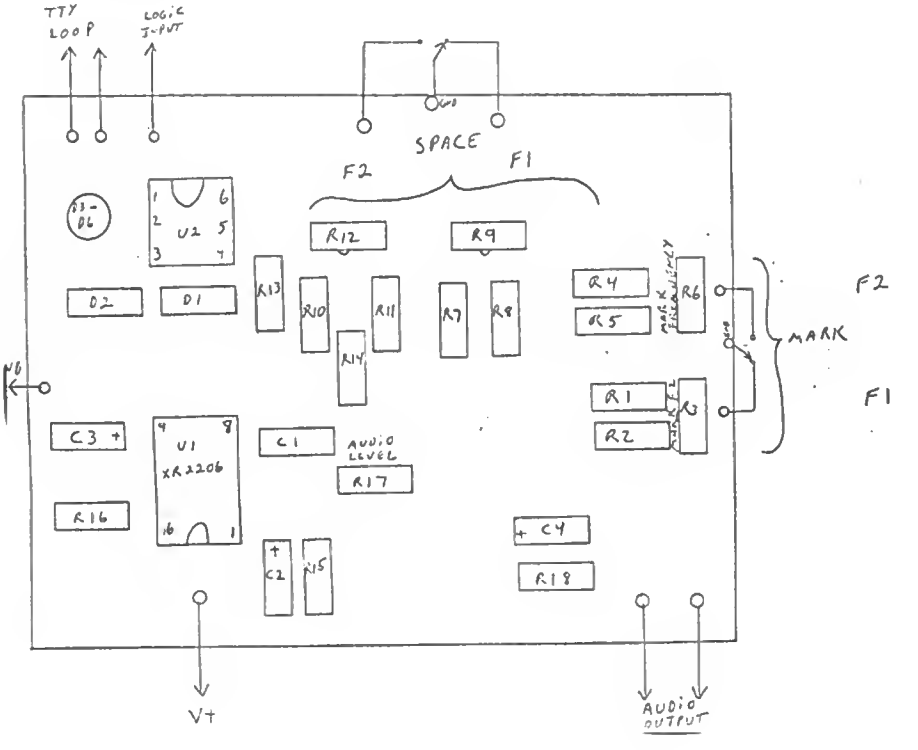

"CHARLIE SPECIAL" Teletype AFSK Demodulator
Designed by W6PNM February 1976

Redrawn by Glen Charnock WB6JKM
This circuit draws about 10 ma at 12 volts.
It operates quite well on VHF RTTY but will not give satisfactory operation on HF.

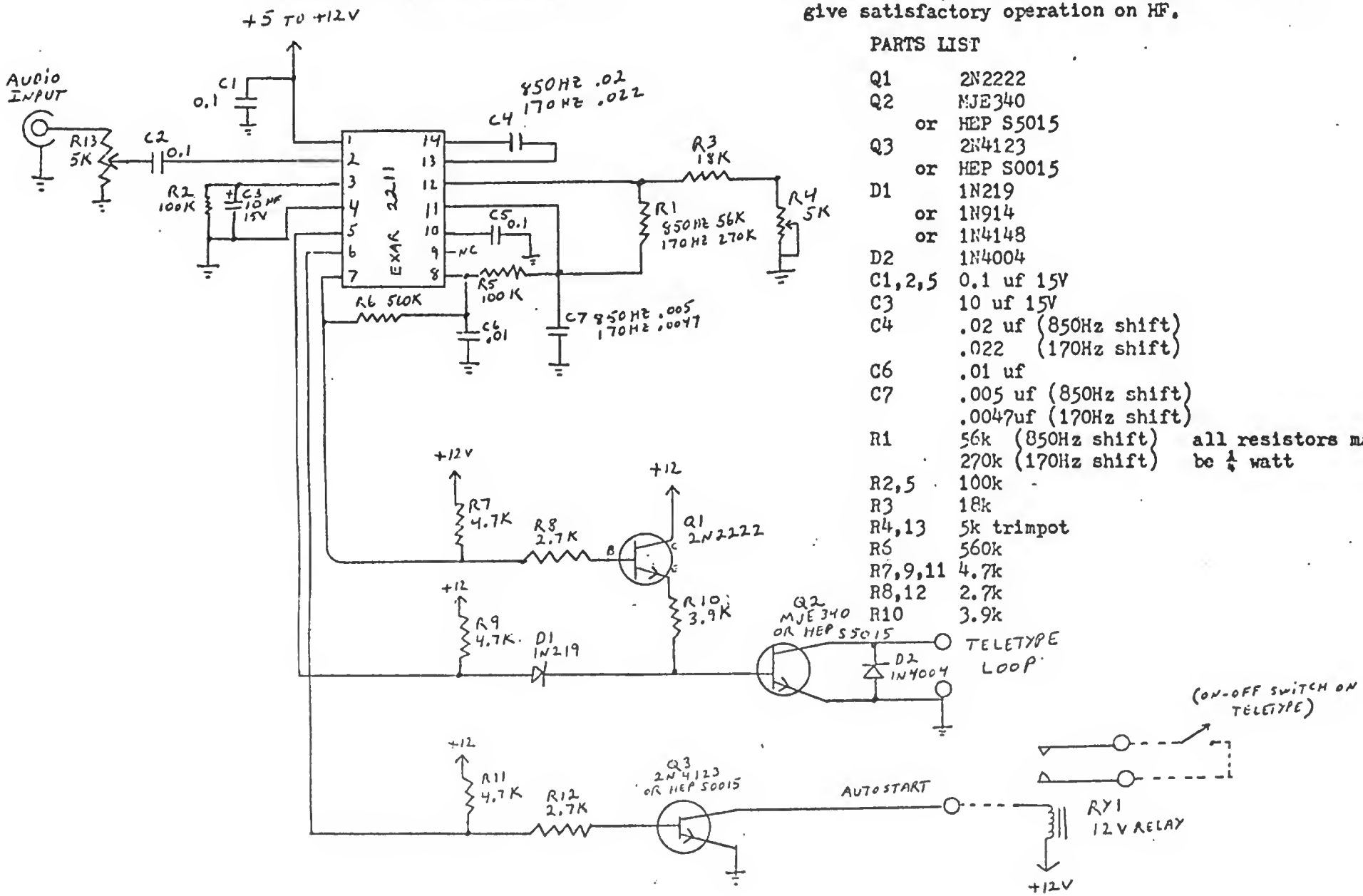

PARTS LIST

Q1	2N2222
Q2	MJE340
or	HEP S5015
Q3	2N4123
or	HEP S0015
D1	1N219
or	1N914
or	1N4148
D2	1N4004
C1,2,5	0.1 uf 15V
C3	10 uf 15V
C4	.02 uf (850Hz shift)
	.022 (170Hz shift)
C6	.01 uf
C7	.005 uf (850Hz shift)
	.0047uf (170Hz shift)
R1	56k (850Hz shift)
	270k (170Hz shift)
R2,5	100k
R3	18k
R4,13	5k trimpot
R6	560k
R7,9,11	4.7k
R8,12	2.7k
R10	3.9k

all resistors may be ¼ watt

AFSK GENERATOR by Martin Geisler WA6TIC
From RTTY Journal
July-August 1975
Redrawn by Glen Charnock WB6JKM

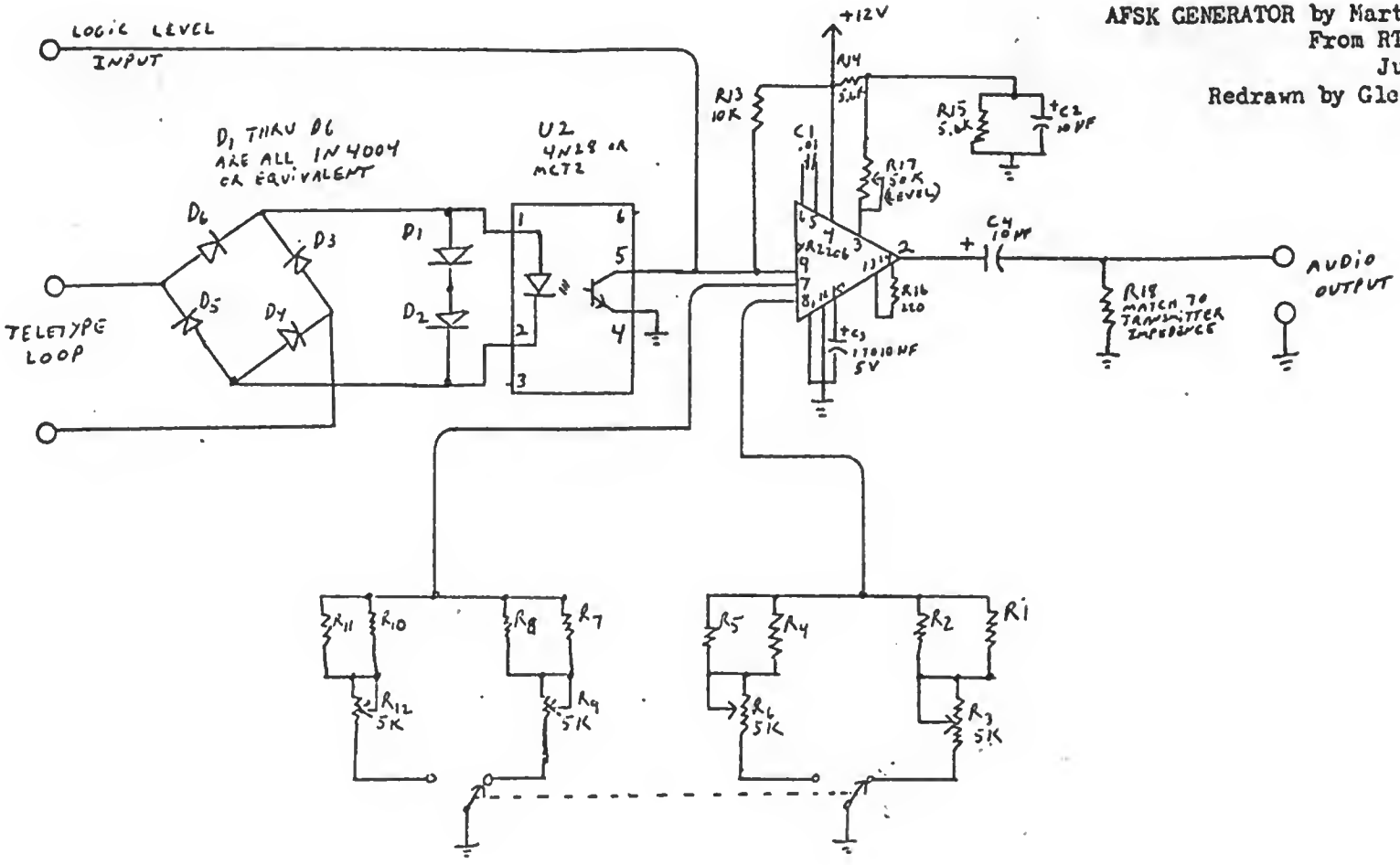

PARTS LIST

C1	.01 uf polystyrene, polycarbonate, or 1% type	U1	XR2206
C2, 4	10 uf 15V	U2	4N28, MOC, 1003, MCT2 etc. opto-isolator
C3	1 to 10 uf 15V	D1,2	1N4004
R1,R2,R3	The net resistance of this group should be 47.06k (2125 Hz) R1 can be 46-52k 1% then trim with R2 and adjust with R3 (5k pot)	D3-D6	1N4004 or 400V bridge at 100ma or more.

R7,8,9 Similarly adjust for 33.61k for 29.75 Hz (850 Hz shift)
R10,11,12 adjust for 43.57k for 2295Hz (170 Hz shift)
NOTE: R4,5,6 are not needed as the 2125 Hz mark frequency is the same for 170 and 850Hz shift

R13	10k
R14,15	5.6k
R16	220
R17	50k trimpot
R18	output load to match transmitter impedence

TO QRP OR NOT

TO QRP OR NOT TO QRP
THAT IS THE QUESTION

First of all, let me tell you that I am active on RTTY from August 1976 and have my reciprocal license (I am Belgian) from October 1975. My first "love" was RTTY, so I got me the Drake C Line, a fine Beam antenna on top of a 50 feet tower and an old TG-7 page printer with TD-14 tape distributor. (Tapes were punched by local dirigents, (HAMs).

After I put it all together, and waiting six months for the ST-5 demodulator, my first signal was going into the air, right to W1MK, who got my first RTTY QSO on August 15, 976. I was running 35 Watts, holding it sometimes to 30 Watts for saving the transmitter who was running in continuous duty with RTTY FSK and a little blower on top. After a few months a nice heavy windstorm was giving me a new beam, as you can see in the picture (patent pending HI), and, so I got the reflector in the back garden, the driven element was inclined some 15 degrees to the right and the director inclined about 45 degrees to left (is that circular polarization?hi), but the sigs were coming in (and out) like a six element, and perfect SWR match 1:1,2, so worked JA-VK-ZS-PY-TF-A4-4X4-HI-TA-TU and many ON (hi) and PA stations, so, the beam (?) was doing a fine job, so why put it down to repair so I let it up "mutilated" for more than a year, having nice DX surprises, hi!

As I said before, I was, and still am, working with 30-35 Watt power and had some nice 589 reports and sometimes a 599 from all over the world, so I continue to go QRP, it saves the TX and lowers the electric bill. With the money that others use to buy them a linear amplifier, I bought me a HAL Video terminal, running faster, better but still QRP. The question is that when there is a contest on the band you can better watch TV because other HAMs from the same city, putting their BOOM BOOM signal on the band they are holding you under until they hear only BLUB BLUB from you, so let the Kilowat HAMs make the contest and after it I will pick out the DX to make a chat, hi! I have more fun to work that VK with 35 Watts then the other with 2.000 Watts and 599 plus 40db. I am now running two years QRP and have the WAC and QCA Awards, so lets run QRP to the DXCC! I am running exclusively 20 meter RTTY, QNO OTHER BANDS OR MODES, SO, no other modes or bands, so when you hear a weak signal on the band GIVE IT PRIORITY—IT COULD BE ME WITH QRP.

Best DX to all and see us on the band..73 de ISØESS "EMIL".
POSTBOX 190 - Sardegna, Italy.

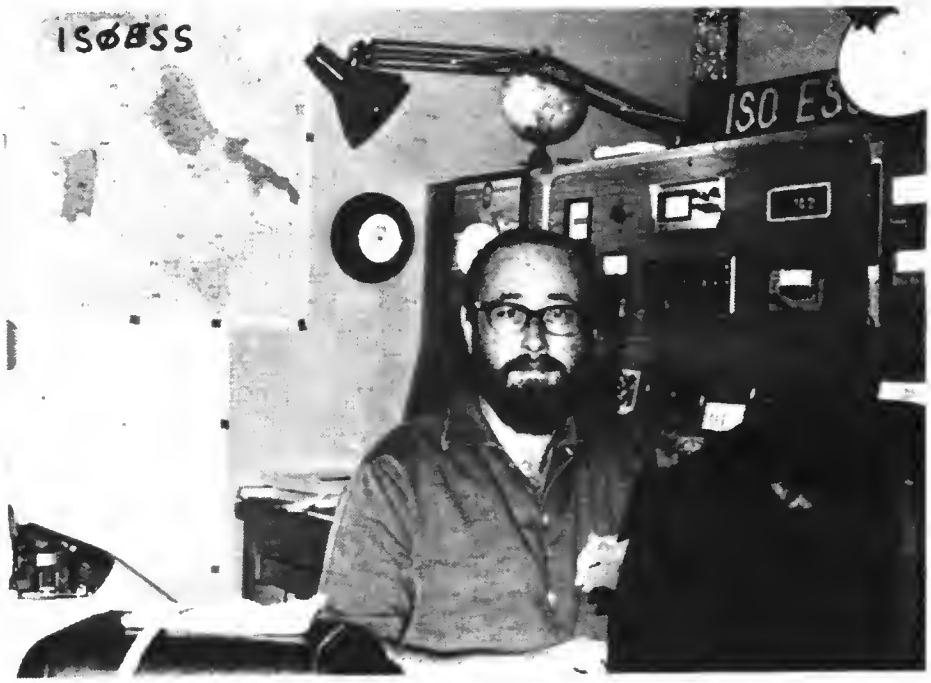

LOOK AT WHAT YOU FELLOWS MISSED AT THE SAN DIEGO CONVENTION...LOIS WORTINGTON OF NEVADA AND WAY W6RAR OF RIVERSIDE RELAXING AFTER A SWIM IN THE POOL.....

HANS, DJ8BT
DARC, DX RTTY
REFERAT MANAGER

BUY YOUR RTTY BEGINNERS HANDBOOK **$4.50**

(NOTE)

From The Publisher
Dee Crumpton

All through
the carolling,
The Feasting
and the Fun...
May your
Christmas season be
A very merry one!

PLUS/MINUS POWER SUPPLIES

Nat Stinnette, W4AYV
890 Virginia Avenue
Tavares, FL 32778

In my mail during the past couple of years I have found some confusion among RTTY beginners regarding the split, or dual power supply. I hope the next few paragraphs will clear up some of this confusion for you.

As you may have noticed in looking around for a terminal unit that practically all solid state terminal units require a plus and a minus voltage. The reason for this is that most of the ICs used in the TUs such as the 709, 741, 565, etc., are designed to use this plus and minus voltage. Everyone knows what you mean when you say plus 12 volts but when you say minus 12 volts things begin to get a little fuzzy.

Looking at the diagram of a split power supply, Figure 1 you will note the secondary of the transformer is 25.2 vac with a center tap. If this center tap is grounded to the chassis then we have approximately 12 volts on each side of this ground or reference point. The secondary is rectified with two diodes connected so that they rectify in the forward direction giving a plus output with reference to the center tap or chassis ground. Now if we also do the same thing except reverse the diodes the output will be negative with respect to the center tap or chassis ground. So what we now have are twp 12 volt power supplies, one positive and one negative with respect to ground.

The diagram shows an easy way to make one of these split 12 volt power supplies (regulated) using the LM-340T-12 3-terminal positive regulator and the 320T-12 negative regulator. These devices give good regulation and are rated at 1 amp. Each has a metal tab on the back side which can be bolted to a heat sink. On the LM-340T-12 this tab is the ground connection and is common to one of the pins so it can be bolted to the chassis which is ground. The tab on the 320T-12 is NOT ground but is the input so it must be insulated from the chassis using a nylon bolt and nut. Unless you expect to draw the full lamp. it is not necessary to use a heat sink, the metal chassis will serve just as well. The ground pin on each regulator should be connected to the chassis ground.

There is another series of these 3-terminal regulators which are interchangeable with the 340 and 320 series. They are the 7812 (plus 12 volt) and the 7912 (minus 12 volt). Their size is a little larger.

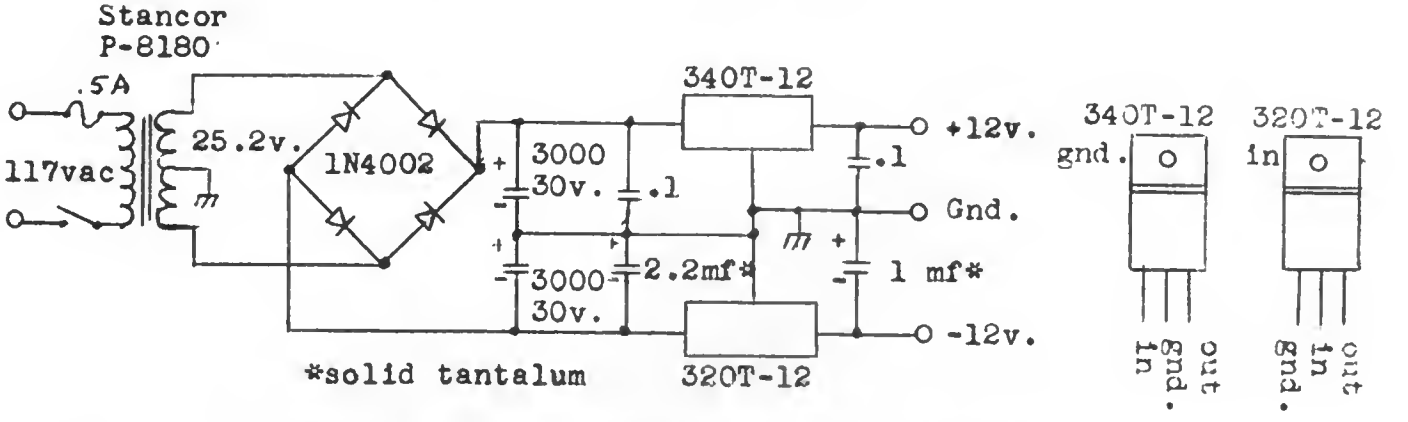

Fig. 1. ±12 vdc regulated power supply.

CONVENTION PICS 1978

DOVETRON

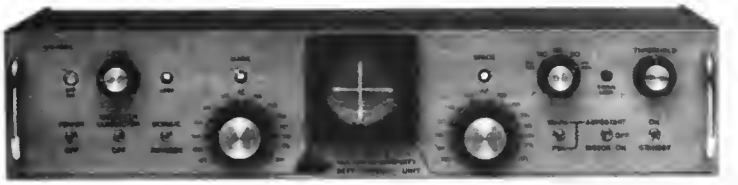

MPC-1000C

Multipath Correction
In-Band Diversity &
AFSK Tone Keyer

Amateur Net: $545.00

Standard features include CONTINUOUSLY tuneable Mark and Space channels (1000 Hz to 3200 Hz), Dual Mode (MARK or FSK) Autostart and internal high level neutral loop keyer (20 to 60 ml). Both EIA and MIL FSK outputs are provided for direct interface to microprocessor and video terminal peripherals.

MPC-1000CR

Signal Regeneration &
Speed Conversion

Amateur Net: $645.00

A front panel switch permits internal TSR-200 Signal Regenerator-Speed converter assembly to electronically "gear-shift" between 60, 67, 75 and 100 WPM. All incoming and outgoing signals are regenerated to less than 0.5% bias distortion. Also available with DIGITAL Autostart (TSR-200D): Amateur Net: $695.00

MPC-1000R/-TSR-500

Dual UART Regeneration,
Speed Conversion, 200
Char. Memory, Word Correction & DIGITAL
Autostart

Amateur Net: $895.00*

The MPC-1000R/TSR-500 provides Preloading and Recirculation of the 200 character FIFO Memory, a keyboard-controlled Word Correction circuit, Variable Character Rate, Tee Dee Inhibit, Blank/LTRS Diddle, a Triple Tone-Pair AFSK Tone Keyer and a Character Recognition/Speed Determination DIGITAL (DAS-100) Autostart mode.

*The MPC-1000R is also available without a TSR assembly and functions as a MPC-1000C with a Triple Tone-Pair AFSK Tone Keyer. This "Basic-R" permits future expansion with a TSR-100, TSR-200, TSR-200D or TSR-500 by simply lifting the lid and plugging in the appropriate TSR assembly: Amateur Net (Basic-R): $595.00

Your QSL will bring complete specifications, or call: 213-682-3705.

DOVETRON

627 FREMONT AVENUE
(P. O. BOX 267)
SOUTH PASADENA, CA. 91030

MPC-1000R BY DOVETRON

MULTIPATH CORRECTION, IN-BAND DIVERSITY, SIGNAL REGENERATION, UP-DOWN SPEED CONVERSION, 200 CHARACTER FIFO MEMORY, KEYBOARD-CONTROLLED WORD CORRECTION & DIGITAL AUTOSTART

THE MPC-1000R REGENERATIVE RTTY TERMINAL UNIT

The DOVETRON MPC-1000R is a complete Transmit-Receive modem designed for optimum radio teleprinter communications on land, sea and in the air.

Standard features include a high level loop supply and keyer (neutral or polar), EIA and MIL FSK outputs, a phase-continuous AFSK Tone Keyer with three selectable Mark - Space - Shift tone pairs, Mark, FSK & Digital Autostart, Automatic Markhold, an internal RY Generator for terminal unit Self-Test and circuit adjustment, and a Signal Loss Alarm circuit.

The MPC Series is available in six different models to meet your exact requirements.

Complete specifications are available on your request, or call 213-682-3705.

DOVETRON

627 Fremont Avenue
South Pasadena,
California 91030, U.S.A.

RTTY Journal

PO BOX RY

Cardiff by the Sea, CA. 92007

SECOND CLASS PERMIT PAID
AT ENCINITAS, CA 92024